Dutchi Motors B.V. DM1- 160 M6 IM B3 / IM 1001

Power is our commodity, the world is our market !

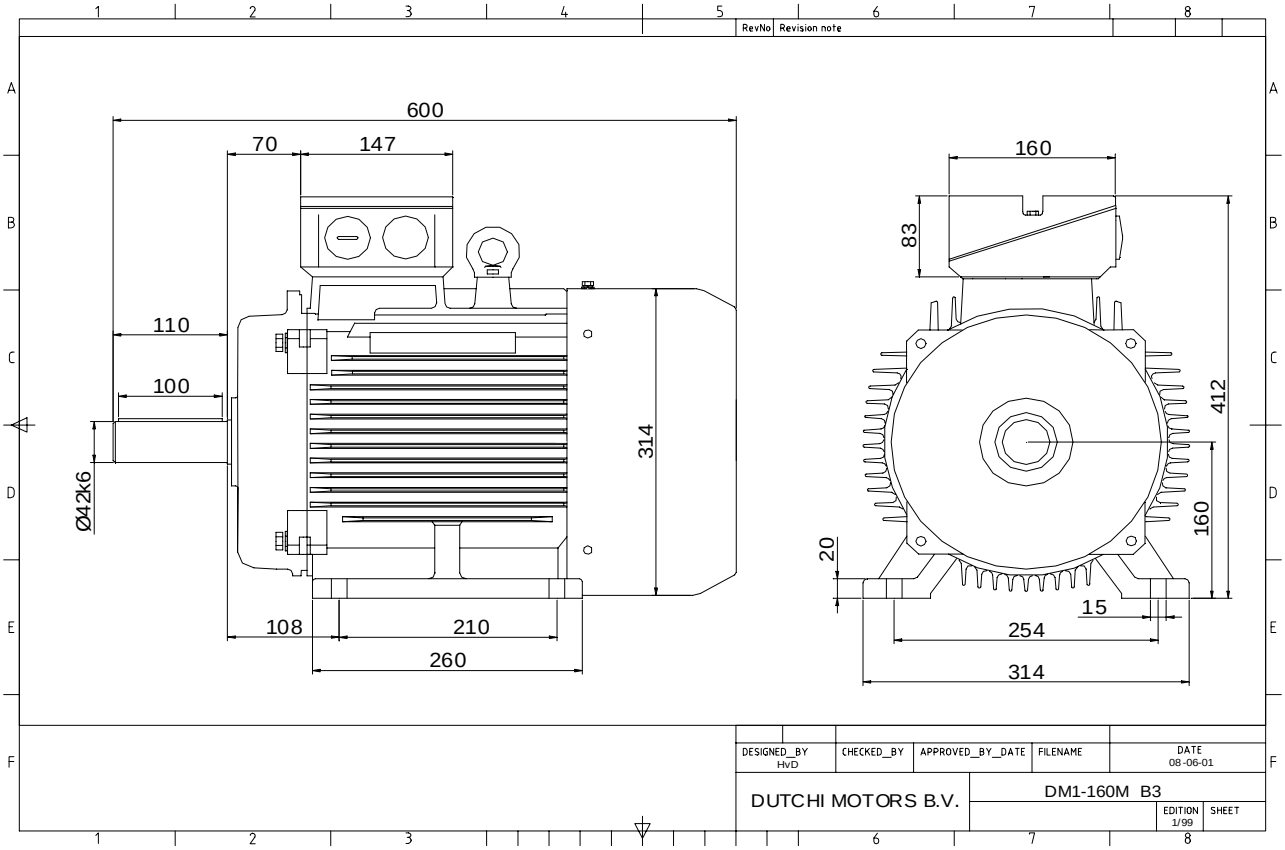

Specification	IEC 60034-1			
Manufacturer	Dutchi Motors B.V.			
Motor type	DM1-	160 M6		
Rated power	7,5	kW	S1	duty
Speed	970	r.p.m		
Voltage	400	/	690	V
Frequency	50	Hz		
Connection	Δ	/	Y	
Amps full load	15,84	/	9,14	A
Amps no-load(400V)	8,00	A		
Enclosure	IP 55			
Insulation Class	F (temp. rise B (80 K))			
Max. coolant temp.	40°C			
Max. altitude	1.000	mtr, above sea level		
Comment	3 x PTC 150°C			
Cable entries	2 x M40x1,5 + 1 x M20x1,5 (ptc)			
Feature	Cast-iron motor			
Weight	108	kg		
Catalog no.	11136750D			
Warranty	12~18 months			

Efficiency class			N/A		
Load data	100%	75%	50%	25%	
Efficiency	85,2	85,4	83,3	74,2	%
Power factor	0,80	0,75	0,63	0,41	

Sound pressure level (1m)		52,1	dB(A)
Resistance R20 (open)		1,515	Ω
Resistance R20	Δ	1,010	Ω
Full load torque		73,84	Nm
DOL Starting torque vs FL torque		1,71	
DOL Pull up torque vs FL torque		1,38	
DOL Pull out torque vs FL torque		3,17	
Star-Delta Starting torque vs FL torque		0,54	
Star-Delta Pull up torque vs FL torque		0,43	
Star-Delta Pull out torque vs FL torque		0,99	
DOL Starting current vs FL current		6,09	
Star Delta Starting current vs FL current		1,90	
Rotor Inertia		0,0800	kgm2
Bearing DE		6309 - ZZ C3	
Bearing NDE		6309 - ZZ C3	

WI	Change	date	sign.

Dutchi Motors B.V.
P.O. Box 5390
NL-6802 EJ ARNHEM
Tel : +31-(0)26 - 3541 600
Fax : +31-(0)26 - 3541 650

Discription	date	sign.
Drawing made by :	27-04-04	HvD

dutchi.motors@dutchi.nl
www.dutchi.com

We make all efforts to better our products. Versions, technical data and figures could be changed therefore. They are not binding before written confirmation.

Dutchi Motors B.V. DM1- 160 M6 IM B35 / IM 2001

Power is our commodity, the world is our market !

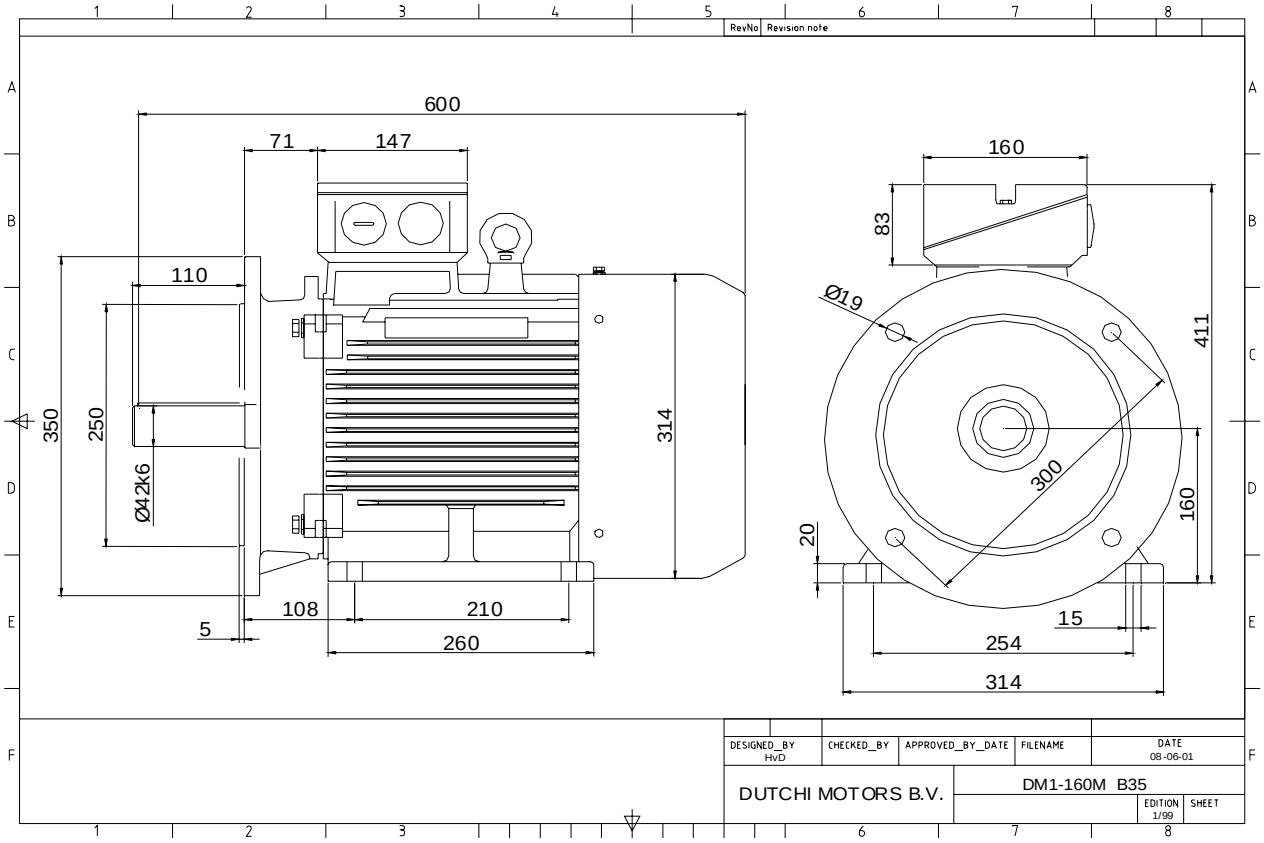

Specification	IEC 60034-1			
Manufacturer	Dutchi Motors B.V.			
Motor type	DM1-	160 M6		
Rated power	7,5	kW	S1	duty
Speed	970	r.p.m		
Voltage	400	/	690	V
Frequency	50	Hz		
Connection	Δ	/	Y	
Amps full load	15,84	/	9,14	A
Amps no-load(400V)	8,00	A		
Enclosure	IP 55			
Insulation Class	F (temp. rise B (80 K))			
Max. coolant temp.	40°C			
Max. altitude	1.000	mtr, above sea level		
Comment	3 x PTC 150°C			
Cable entries	2 x M40x1,5 + 1 x M20x1,5 (ptc)			
Feature	Cast-iron motor			
Weight	108	kg		
Catalog no.	11536750D			
Warranty	12~18 months			

Efficiency class			N/A		
Load data	100%	75%	50%	25%	
Efficiency	85,2	85,4	83,3	74,2	%
Power factor	0,80	0,75	0,63	0,41	

Sound pressure level (1m)		52,1	dB(A)
Resistance R20 (open)		1,515	Ω
Resistance R20	Δ	1,010	Ω
Full load torque		73,84	Nm
DOL Starting torque vs FL torque		1,71	
DOL Pull up torque vs FL torque		1,38	
DOL Pull out torque vs FL torque		3,17	
Star-Delta Starting torque vs FL torque		0,54	
Star-Delta Pull up torque vs FL torque		0,43	
Star-Delta Pull out torque vs FL torque		0,99	
DOL Starting current vs FL current		6,09	
Star Delta Starting current vs FL current		1,90	
Rotor Inertia		0,0800	kgm2
Bearing DE		6309 - ZZ C3	
Bearing NDE		6309 - ZZ C3	

WI	Change	date	sign.

Dutchi Motors B.V.	Discription	date	sign.
P.O. Box 5390	Drawing made by :	27-04-04	HvD
NL-6802 EJ ARNHEM			
Tel : +31-(0)26 - 3541 600	dutchi.motors@dutchi.nl		
Fax : +31-(0)26 - 3541 650	www.dutchi.com		

We make all efforts to better our products. Versions, technical data and figures could be changed therefore. They are not binding before written confirmation.

Dutchi Motors B.V. DM1- 160 M6 IM B5 / IM 3001

Power is our commodity, the world is our market !

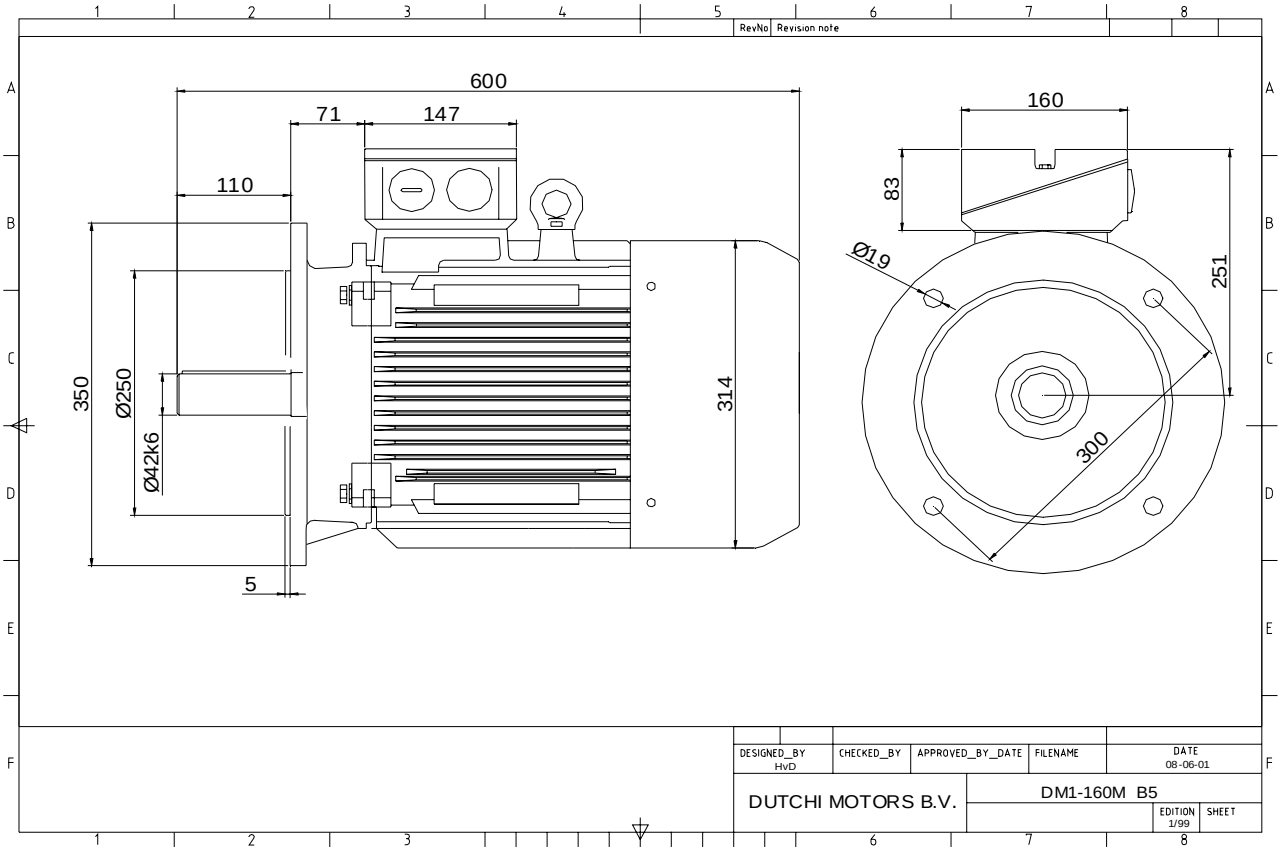

Specification	IEC 60034-1			
Manufacturer	Dutchi Motors B.V.			
Motor type	DM1-	160 M6		
Rated power	7,5	kW	S1	duty
Speed	970	r.p.m		
Voltage	400	/	690	V
Frequency	50	Hz		
Connection	Δ	/	Y	
Amps full load	15,84	/	9,14	A
Amps no-load(400V)	8,00	A		
Enclosure	IP 55			
Insulation Class	F (temp. rise B (80 K))			
Max. coolant temp.	40°C			
Max. altitude	1.000	mtr, above sea level		
Comment	3 x PTC 150°C			
Cable entries	2 x M40x1,5 + 1 x M20x1,5 (ptc)			
Feature	Cast-iron motor			
Weight	108	kg		
Catalog no.	11236750D			
Warranty	12~18 months			

Efficiency class			N/A		
Load data	100%	75%	50%	25%	
Efficiency	85,2	85,4	83,3	74,2	%
Power factor	0,80	0,75	0,63	0,41	

Sound pressure level (1m)		52,1	dB(A)
Resistance R20 (open)		1,515	Ω
Resistance R20	Δ	1,010	Ω
Full load torque		73,84	Nm
DOL Starting torque vs FL torque		1,71	
DOL Pull up torque vs FL torque		1,38	
DOL Pull out torque vs FL torque		3,17	
Star-Delta Starting torque vs FL torque		0,54	
Star-Delta Pull up torque vs FL torque		0,43	
Star-Delta Pull out torque vs FL torque		0,99	
DOL Starting current vs FL current		6,09	
Star Delta Starting current vs FL current		1,90	
Rotor Inertia		0,0800	kgm2
Bearing DE		6309 - ZZ C3	
Bearing NDE		6309 - ZZ C3	

WI	Change	date	sign.

Dutchi Motors B.V.	Discription	date	sign.
P.O. Box 5390	Drawing made by :	27-04-04	HvD
NL-6802 EJ ARNHEM			
Tel : +31-(0)26 - 3541 600	dutchi.motors@dutchi.nl		
Fax : +31-(0)26 - 3541 650	www.dutchi.com		

We make all efforts to better our products. Versions, technical data and figures could be changed therefore. They are not binding before written confirmation.

Dutchi Motors B.V. DM1- 160 M6 IM V1 / IM 3011

Power is our commodity, the world is our market !

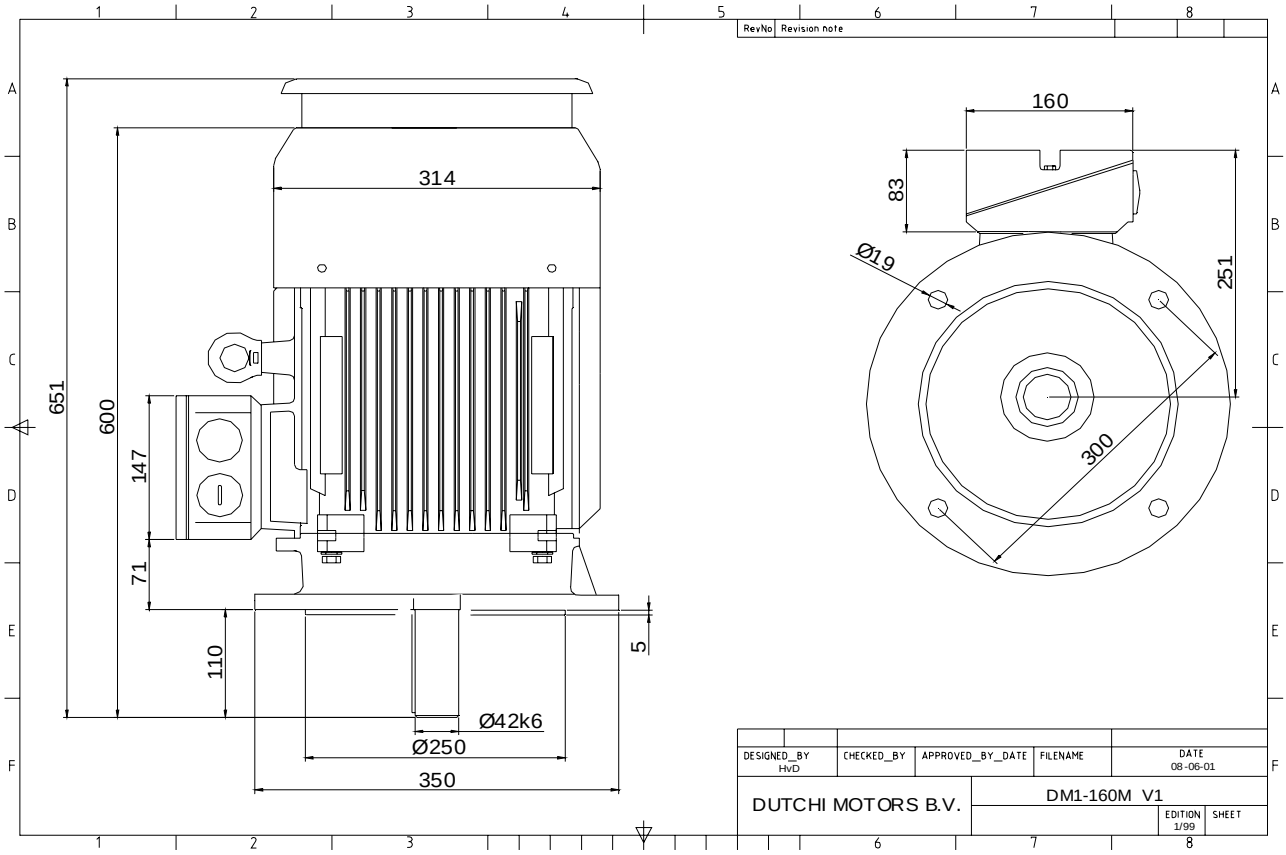

Specification	IEC 60034-1			
Manufacturer	Dutchi Motors B.V.			
Motor type	DM1-	160 M6		
Rated power	7,5	kW	S1	duty
Speed	970	r.p.m		
Voltage	400	/	690	V
Frequency	50	Hz		
Connection	Δ	/	Y	
Amps full load	15,84	/	9,14	A
Amps no-load(400V)	8,00	A		
Enclosure	IP 55			
Insulation Class	F (temp. rise B (80 K))			
Max. coolant temp.	40°C			
Max. altitude	1.000	mtr, above sea level		
Comment	3 x PTC 150°C			
Cable entries	2 x M40x1,5 + 1 x M20x1,5 (ptc)			
Feature	Cast-iron motor			
Weight	108	kg		
Catalog no.	11036750D			
Warranty	12~18 months			

Efficiency class			N/A		
Load data	100%	75%	50%	25%	
Efficiency	85,2	85,4	83,3	74,2	%
Power factor	0,80	0,75	0,63	0,41	

Sound pressure level (1m)		52,1	dB(A)
Resistance R20 (open)		1,515	Ω
Resistance R20	Δ	1,010	Ω
Full load torque		73,84	Nm
DOL Starting torque vs FL torque		1,71	
DOL Pull up torque vs FL torque		1,38	
DOL Pull out torque vs FL torque		3,17	
Star-Delta Starting torque vs FL torque		0,54	
Star-Delta Pull up torque vs FL torque		0,43	
Star-Delta Pull out torque vs FL torque		0,99	
DOL Starting current vs FL current		6,09	
Star Delta Starting current vs FL current		1,90	
Rotor Inertia		0,0800	kgm2
Bearing DE		6309 - ZZ C3	
Bearing NDE		6309 - ZZ C3	

WI	Change	date	sign.

Dutchi Motors B.V.	Discription	date	sign.
P.O. Box 5390	Drawing made by :	27-04-04	HvD
NL-6802 EJ ARNHEM			
Tel : +31-(0)26 - 3541 600	dutchi.motors@dutchi.nl		
Fax : +31-(0)26 - 3541 650	www.dutchi.com		

We make all efforts to better our products. Versions, technical data and figures could be changed therefore. They are not binding before written confirmation.